ChurchOutlet.com

Model T2S-WF

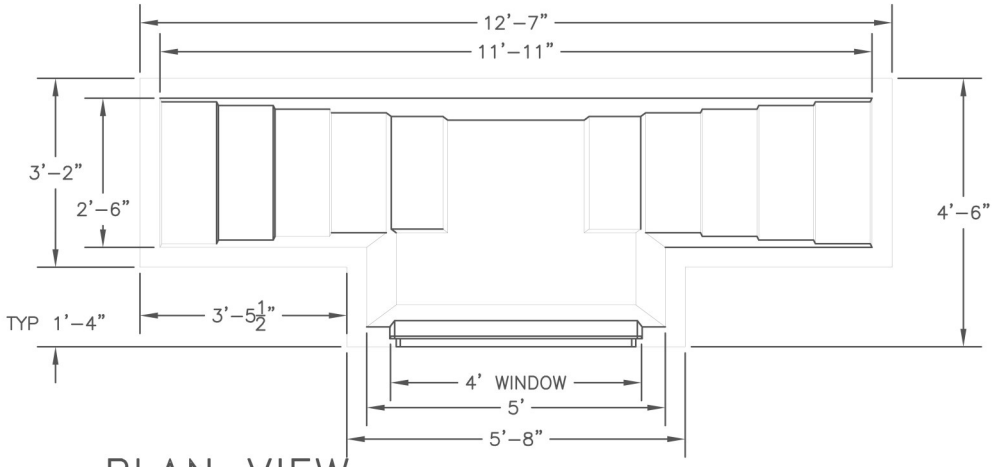

PLAN VIEW

Capacity: 550 gal.

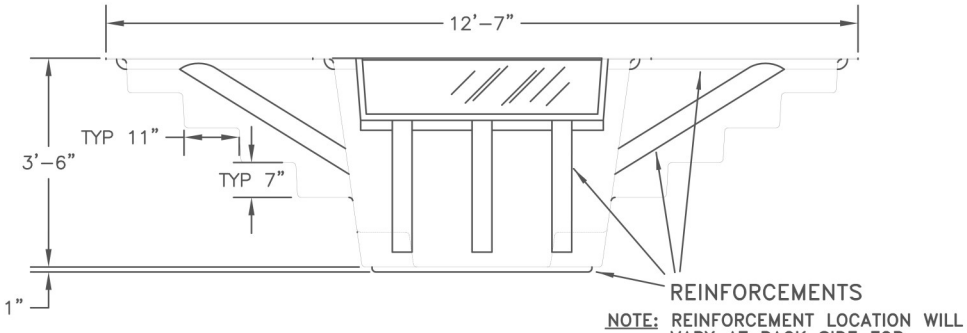

NOTE: REINFORCEMENT LOCATION WILL VARY AT BACK SIDE FOR DRAIN LOCATIONS

SIDE VIEW

NOTE:
Steps shall conform to nationally accepted model building code requirements with regard to riser height and tread width. Step tread surfaces shall have a raised disk slip–resistant surface. All corners shall be gently rounded for safety.

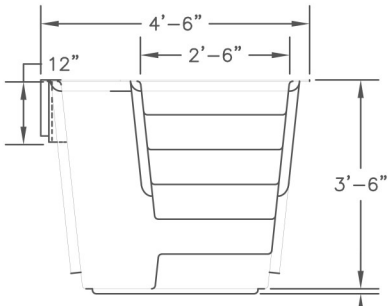

END VIEW

Installation Notes:
Plumbing holes (drain, heater, etc.) to be located and cut in field by contractor or plumber.
Drain should be located in any of the four corners of the tank floor.

800-736-3113 info@churchoutlet.com